Installation Instruction
安装说明书

Pixie 150

Model Name 型号	Power Draw 实际功率	Dimension 尺寸	Voltage 电压	Suitable Tank 适用鱼缸
Pixie 150	150w	12.2"(L)*5.5"(W) *0.11"(H)	100~240V AC 36V DC	36"(L)*28"(W) 90cm(L)*70cm(W)

Hang Kit Installation/挂绳安装

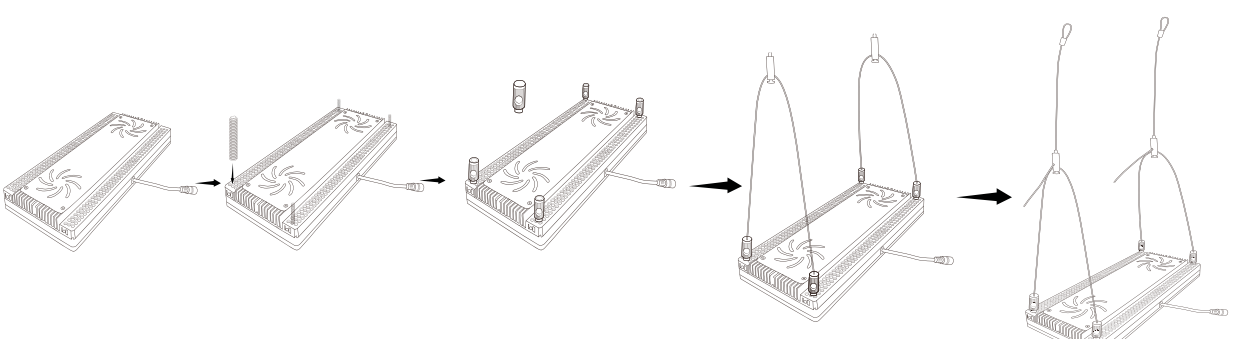

Mount Kit Installation/支架安装

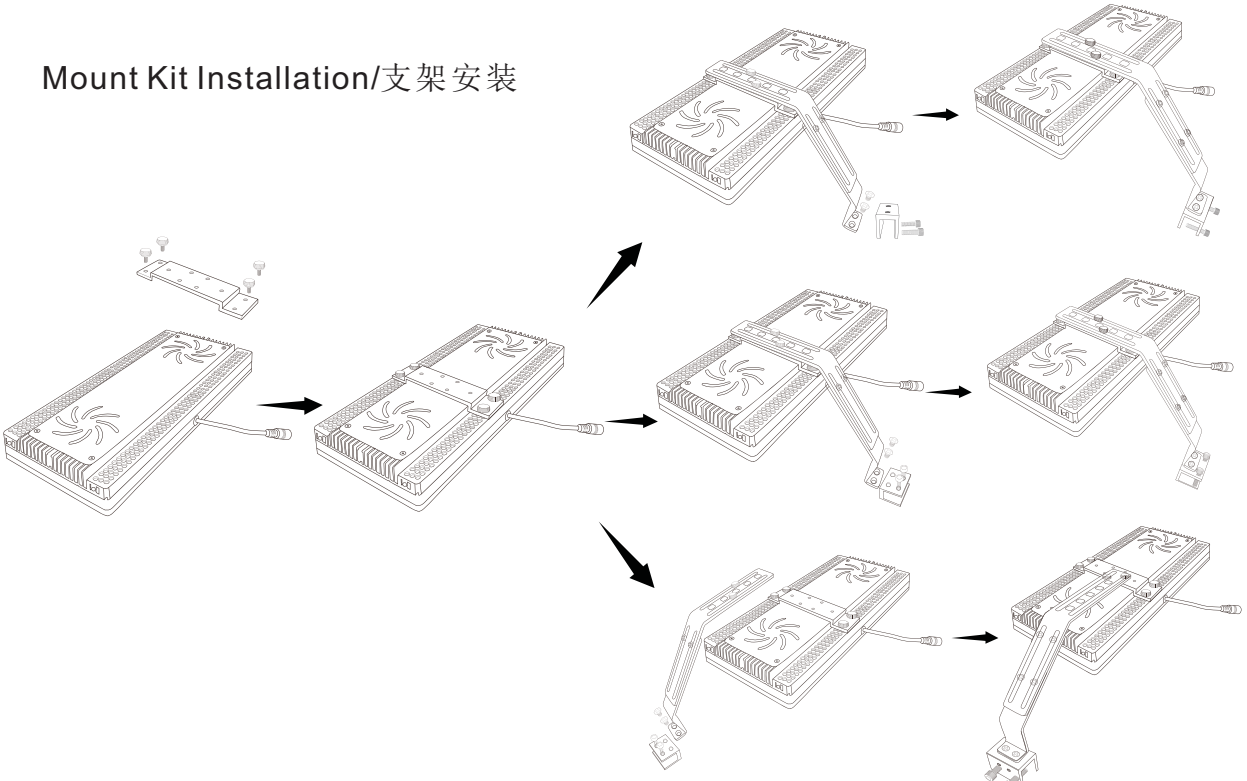

Asta 120

Model Name 型号	Power Draw 实际功率	Dimension 灯具尺寸	Voltage 电压	Suitable Tank 适用鱼缸
Asta 120	120w	4.4"(D)*3.86"(H) 112mm(D)*98mm(H)	100~240V AC 36V DC	24" cube 60cm方缸

Installation/安装方式

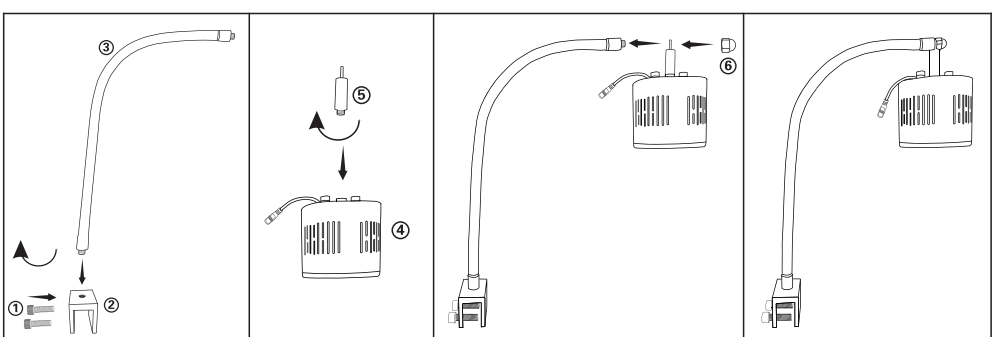

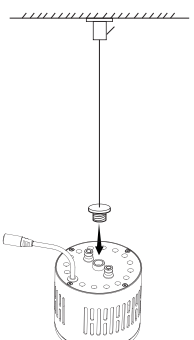

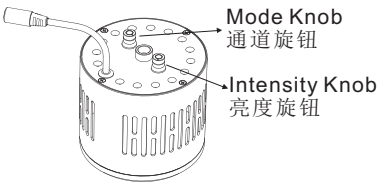

Note:
1. Wifi mode: Turn the Mode Knob to Wifi, then use App to program the lamp.
2. Manual mode: Turn the Mode Knob to Ch1, then turn the Intensity Knob to adjust the intensity for channel 1; Turn the Mode Knob to Ch2, then turn the Intensity Knob. Same way to adjust channel 3 and 4.

1. Wifi模式：旋转模式旋钮使之指向Wifi,用手机App调控灯具
2. 手动模式:旋转模式旋钮使之指向CH1，再旋转亮度旋钮调节通道1的亮度,依次设置通道2,3,4的亮度。请注意,如果只旋转通道旋钮,已设置好的亮度会改变为此时亮度旋钮对应值。比如,亮度旋钮指向最小值（零),把通道旋钮旋转一周,则灯关闭。

Master Controller/无线控制器

2. 4G version/2.4G版本

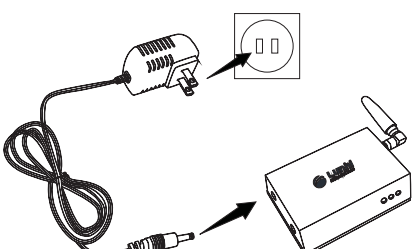

Wired Version/有线连接版本

